22x238 mm strikers - round end, with curved lip, for flush doors 38-45 mm

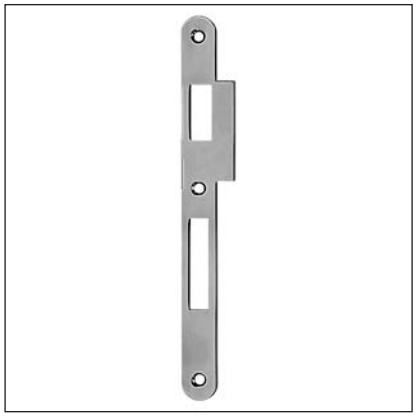

Description

Striker with round ends, 22 mm wide, 238 mm long. The lip is bent where the spring latch strikers for easier and smoother closing of the door. Suitable for both right and left-handed application (see code chart).

Application

Used in combination with SL and DQ Opera locks, on interior or main rebated doors with 38 mm timber frame.

Mounting

Mill the frame according to the dimensions shown in the diagram. The inner edges of the striker and the forend of the lock have to be aligned. Use ø4,5 mm screws of a suitable length.

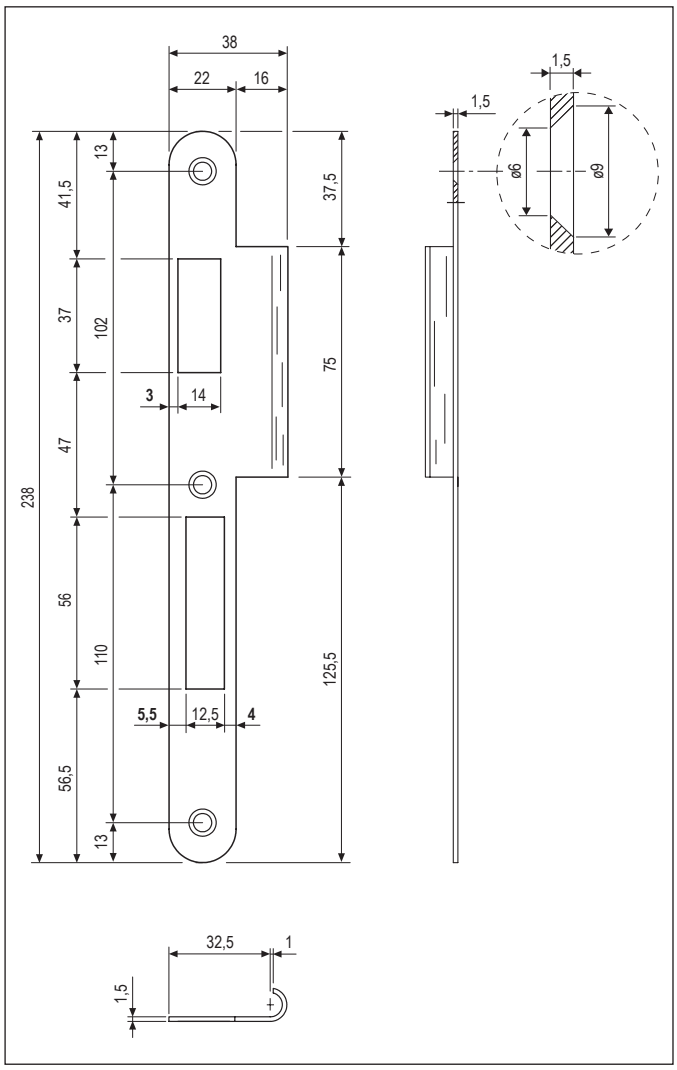

Application example with a door 38 mm thick

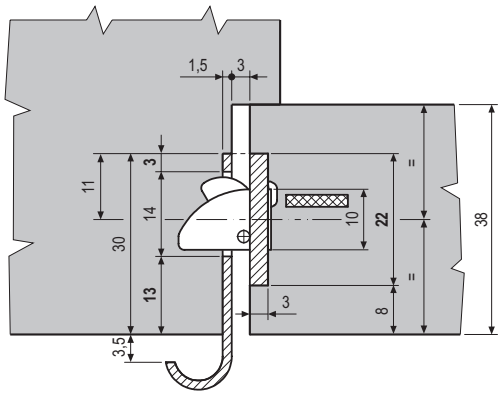

Application example with a door 45 mm thick

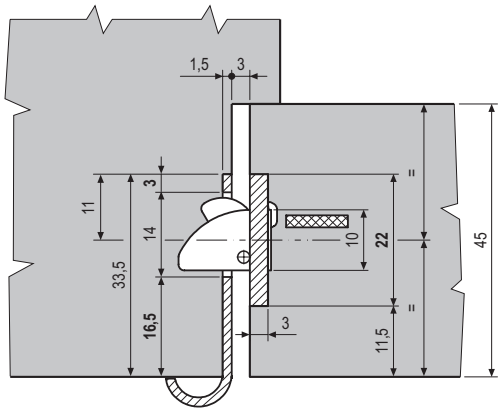

NB. *Application executed without considering the thickness of the gaskets.*

Order Specifications

	SALES CODE			Type
	Ref.	Model	Finish code	
	B59903	01	XX	r.h.
	B59903	02	XX	l.h.

NB. *Refer to the price list in force to check the availability of the finishes.*