25x138 mm striker - square ends with shaped lip

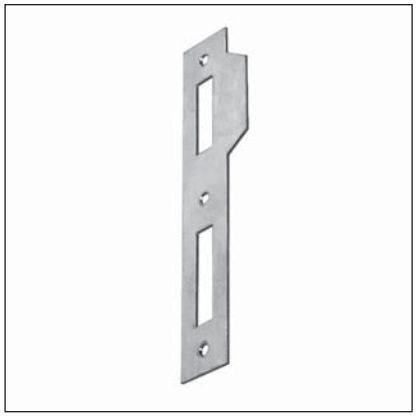

Description

Steel or brass striker with square ends, 25 mm wide - 138 mm long. 11-mm shaped lip for jamb protection in area where spring latch strikers. Suitable for both right and left-handed applications.

Application

Used in combination with a Patent Piccola lock, on interior flush doors with timber frame.

Mounting

Mill the frame according to the dimensions shown in the diagram.
Install the striker with the lip flush with the edge of the frame. Fasten with three 2,5x16 mm screws.

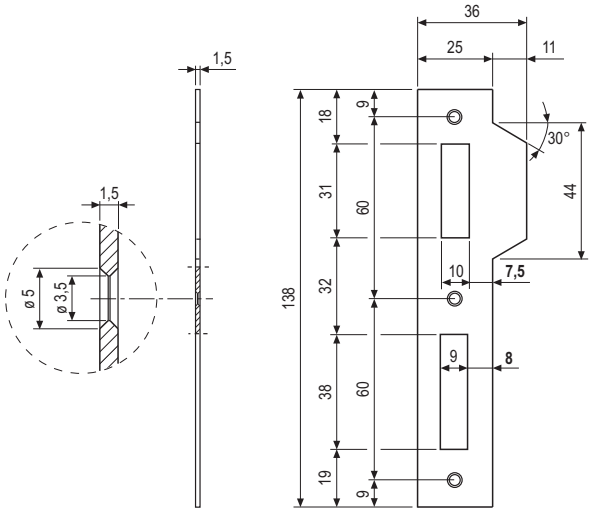

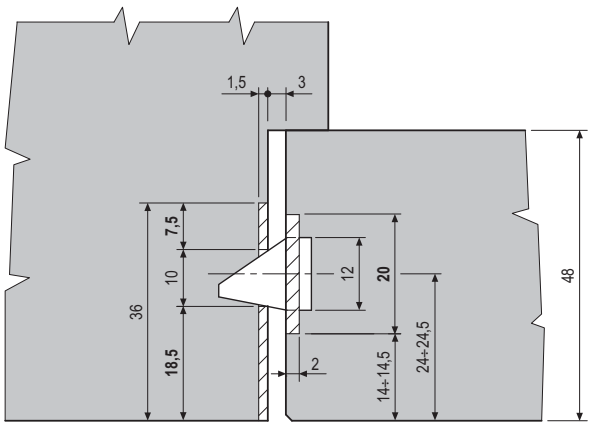

NB. *Application executed without considering the thickness of the gaskets.*

Order Specifications

Material	SALES CODE			
	Ref.	Model	Finish code	
STEEL	B00570	07	XX	
BRASS	B00570	08	XX	

NB. *Refer to the price list in force to check the availability of the finishes.*